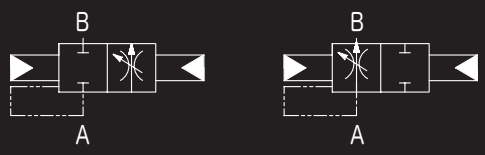

VPL Series

113011 E

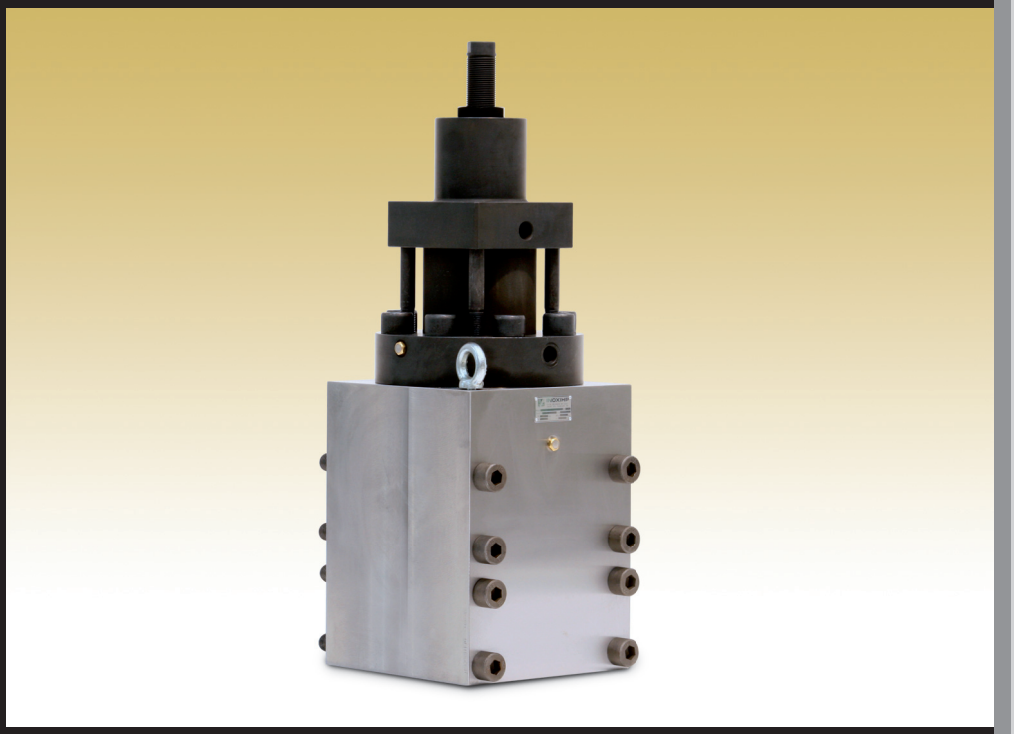

ABOUT USING WATER

ON-OFF Valves

Oil Actuated

INOXIHP

COMPONENTS AND SYSTEMS FOR HIGH PRESSURE WATER

COMPANY WITH QUALITY MANAGEMENT SYSTEM CERTIFIED BY DNV
= ISO 9001:2008 =

VPL Series

113011 E

General features

- Oil actuated ON - OFF valves.
- Designed to be used in all steel working and metallurgical industries.
- High reliability for heavy and continuous duties.
- Adjustable switching time.
- Stroke regulation till size 11.
- Very smooth valves response (no shocking impact).
- Metal to metal seal.
- Hydraulic solenoid control.

Technical data

• Fluid	Water and HFA
• Function	NO or NC
• Working pressure	350 bar (35 MPa) - 600 bar (60 MPa)
• Ambient temperature	+2°C ÷ +60°C
• Feeding	Hydraulic oil 110 ÷ 120 bar (11 ÷ 12 MPa) temperature +10°C/+30°C
• Electrical input	24 V dc - 110/220 V
• Line version connections	SAE 6000 drilling up to size 10, INOXIHP drilling for size 11
• Materials	Internal parts in stainless steel Body in carbon steel

Panel version

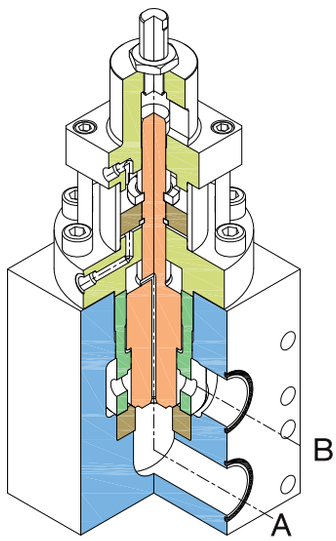

Line version

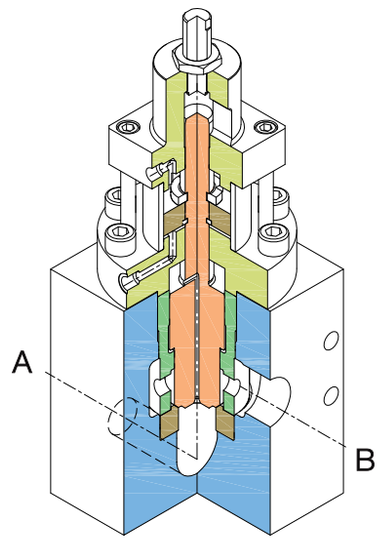

Accessories

The valve can be equipped with:

- *Proximity switches*
- *Hydraulic solenoid valve*
- *Flanges kit*
- *Base Frame*

Options

- *Body in stainless steel*
- *Cartridge version*
- *Drilling for ANSI or special flanges*

Valves Sizes

INOXIHP	DN	inches
04	20	3/4”
05	25	1”
07	40	1 1/2”
08	50	2”
09	65	2 1/2”
10	80	3”
11	100	4”
12*	125	5”
13*	150	6”
14*	200	8”

*ONLY VERSION PN350

Selection Diagram

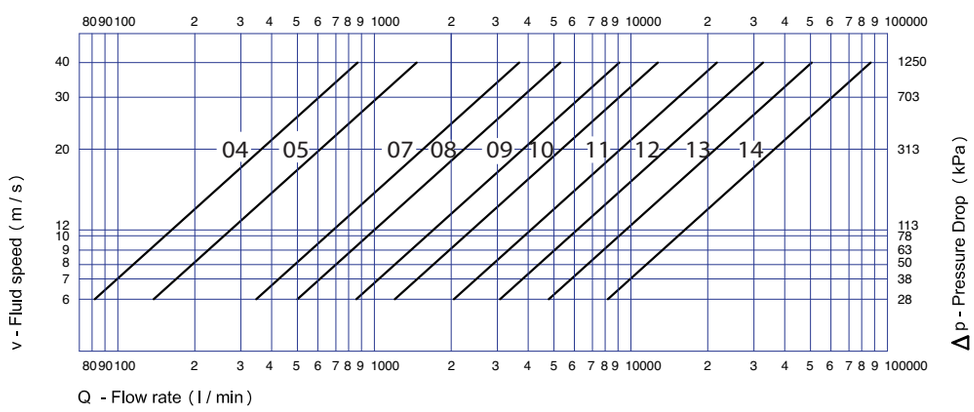

INOXIHP srl - Via Garibaldi, 89
20834 NOVA MILANESE (MB) Italy
Tel: +39 0362 190111
Fax: +39 0362 1901008
E-mail: inoxihp@inoxihp.com
www.inoxihp.com

Due to continuing research and development, all specifications and dimensions are subject to change without notice.